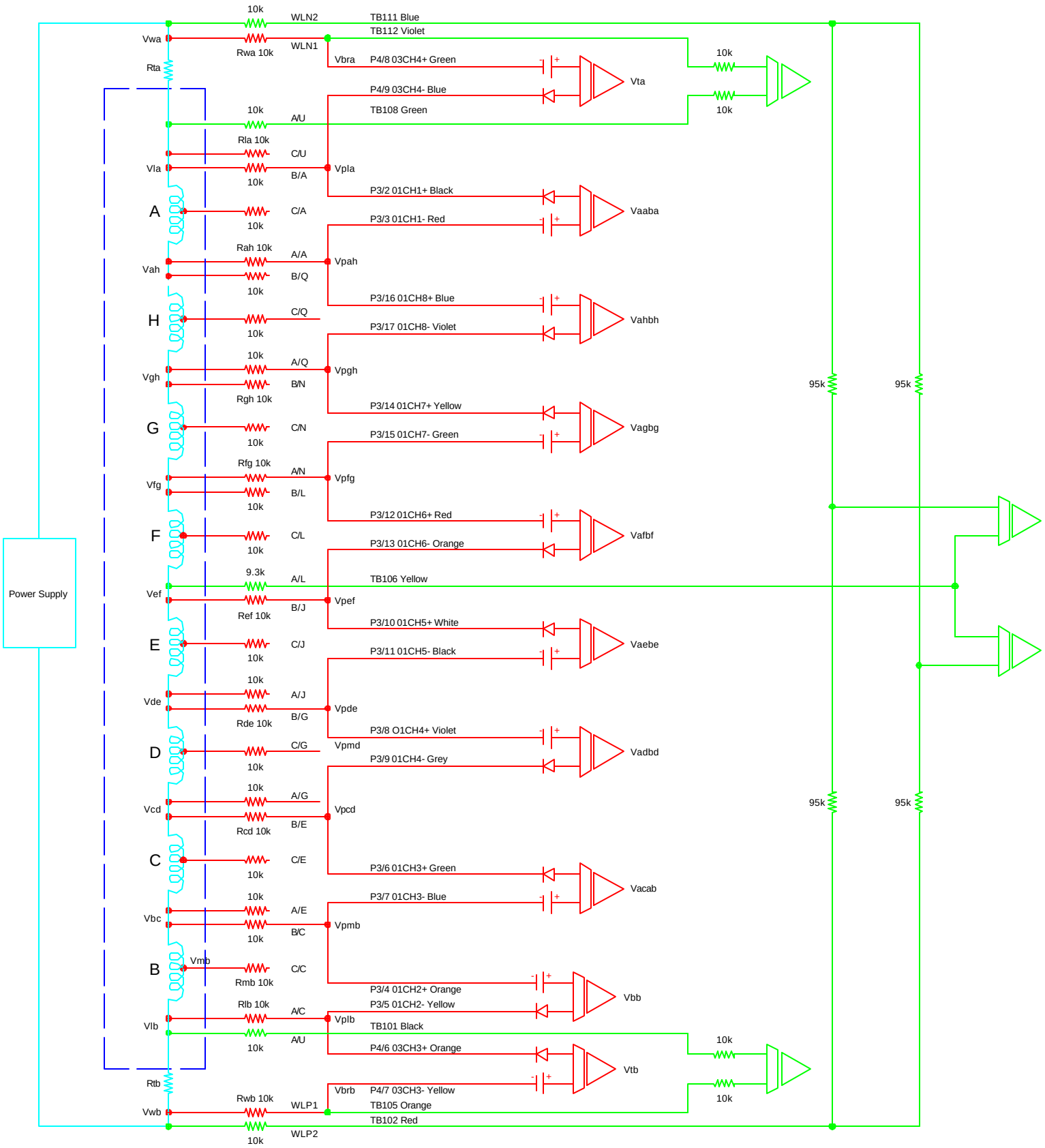
Power Supply
Vwa
Rta
Vla
A
Vah
H
Vgh
G
Vfg
F
Vef
E
Vde
D
Vcd
C
Vbc
B
Vmb
Vlb
Rtb
Vwb
10k
WLN2
TB111 Blue
TB112 Violet
Rwa 10k
WLN1
Vbra
P4/8 03CH4+ Green
P4/9 03CH4- Blue
TB108 Green
A/U
Rla 10k
C/U
B/A
Vpla
P3/2 01CH1+ Black
C/A
P3/3 01CH1- Red
Vaaba
Rah 10k
A/A
Vpah
B/Q
P3/16 01CH8+ Blue
C/Q
P3/17 01CH8- Violet
Vahbh
A/Q
Vpgh
B/N
Rgh 10k
P3/14 01CH7+ Yellow
C/N
P3/15 01CH7- Green
Vagbg
Rfg 10k
A/N
Vpfg
B/L
P3/12 01CH6+ Red
C/L
P3/13 01CH6- Orange
Vafbf
9.3k
A/L
TB106 Yellow
Vpef
B/J
Ref 10k
P3/10 01CH5+ White
C/J
P3/11 01CH5- Black
Vaebe
A/J
Vpde
B/G
Rde 10k
P3/8 O1CH4+ Violet
C/G
Vpmd
P3/9 01CH4- Grey
Vadbd
A/G
Vpcd
B/E
Rcd 10k
C/E
P3/6 01CH3+ Green
P3/7 01CH3- Blue
Vacab
A/E
Vpmb
B/C
C/C
Rmb 10k
P3/4 01CH2+ Orange
P3/5 01CH2- Yellow
Vbb
Rlb 10k
A/C
Vplb
TB101 Black
A/U
P4/6 03CH3+ Orange
Vtb
Vbrb
P4/7 03CH3- Yellow
Rwb 10k
WLP1
TB105 Orange
TB102 Red
WLP2
Vta
95k